Measurement issues in ICT Standards: value, possible impacts and usages

STDC {STANDARDS COMMITTEE}

Luigi **Buglione**, Nicola **Iacovelli**

Madrid (Spain) - February 22, 2011

What is a Standard?

URL: http://en.wikipedia.org/wiki/Domestic_AC_power_plugs_and_sockets

Some questions…

- Q: what is a standard?

- Q: which difference between *de facto* and *de jure* standards?

- Q: IFPUG FPA or CMMI are standards? Which type(s)?

- Q: Do we need standards? Why?

Some standardization bodies

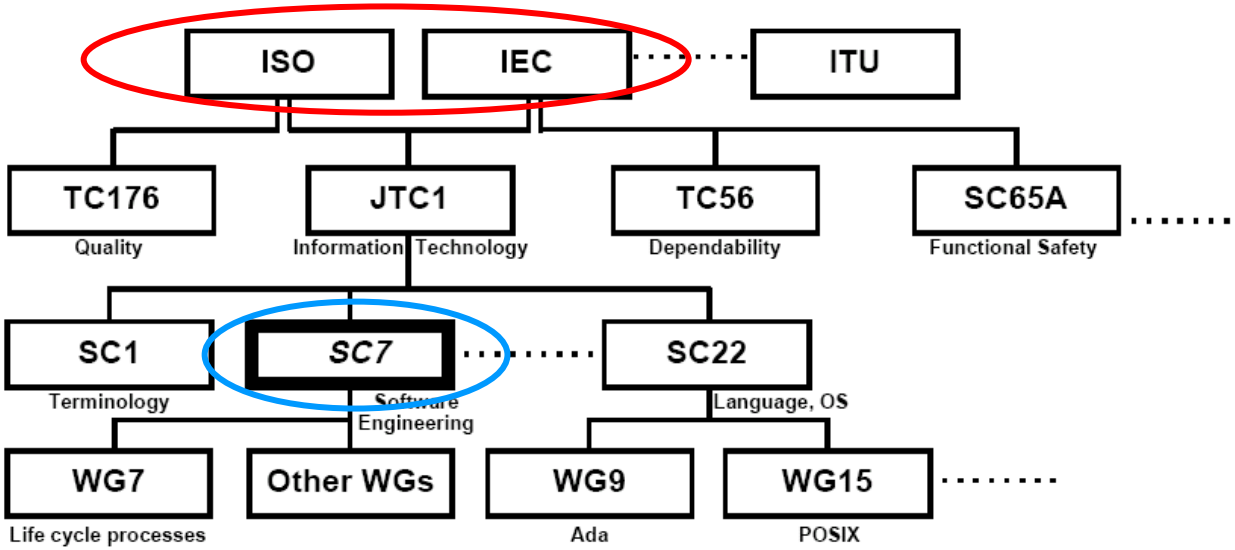

ISO/IEC

IEEE

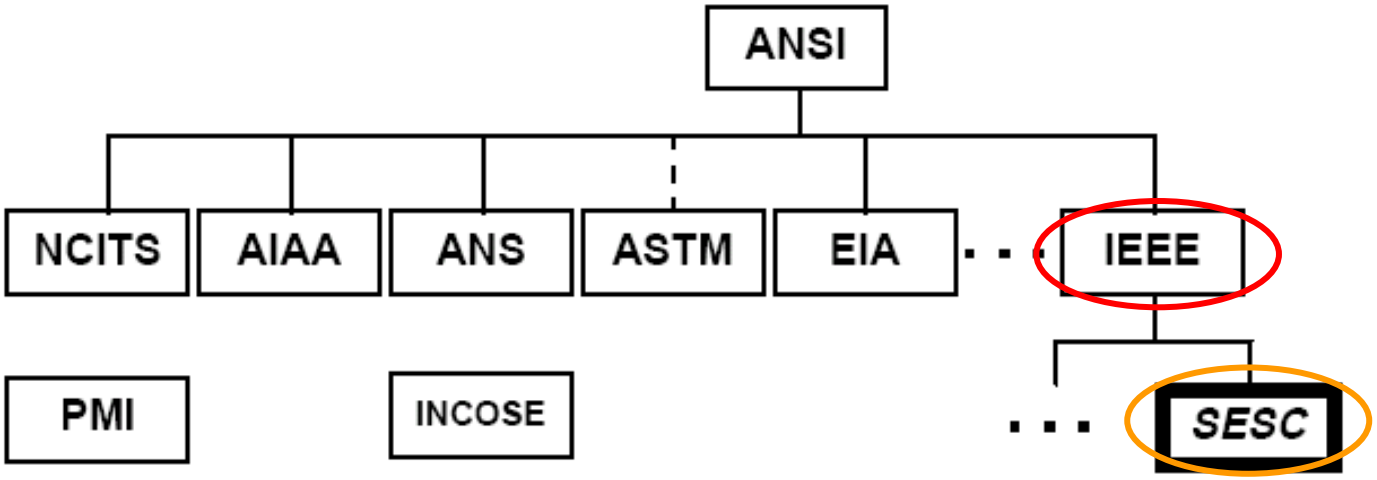

GUFPI-ISMA

- **Origins - History**
  - ✓ Gruppo Utenti Function Point Italia – Italian Software Metrics Association
  - ✓ Non-profit association unformally born in the early ’90s, officially in 1997
  - ✓ URL: www.gufpi-isma.org
- **Main Purpose**
  - ✓ Promote and develop quantitative technical measurement standards for ICT solutions (...) by encouraging cooperation, experience sharing and exchange research results among its members
- **Members**
  - ✓ 150+ (c.a.) members during these years
  - ✓ 5 Membership types
    - o Students Individual, No-Profit/Public/R&D, Companies, Supporters
- **Working Groups**
  - ✓ 5 current WGs active
    - o COSMIC SIG, CPC, SBC, SEC, STDC

GUFPI-ISMA

www.gufpi-isma.org

GUFPI-ISMA: STDC

GUFPI ISMA

GUFPI-ISMA

Home Chi siamo Statuto Organizzazione Comitati CPC SBC SEC STDC Soci Contatti

Sezione pubblica

- Metriche del software
  Esperienze e ricerche
  Il libro GUFPI-ISMA
- Studi & Presentazioni
  Consultazione pubblica
- Newsletter
  Consultazione & iscrizione
- Diventare Soci
  Perchè & come associarsi
- Esami di Certificazione
  Date, modalità, iscrizioni
- Linee Guida Contrattuali
  Per l'uso contrattuale FP
- Linee Guida Italiane
  [illegible] conteggio FP

StandarDs Committee (STDC)

Gruppo di Lavoro sugli Standard nel Software & Systems Engineering

URL www.gufpi-isma.org/stdc; Coord. Luigi Buglione, Nicola Iacovelli

Lo Standards Committee (STDC) riunisce i soci del GUFPI-ISMA che sono interessati al tema degli standard per l'Ingegneria del Software e dei Sistemi e in modo specifico quelli relativi agli aspetti di misurabilità, non solo del prodotto software ma anche dei processi e progetti relativi. Il tema dell'adozione e condivisione degli standard rappresenta un'esigenza non solo di carattere meramente informativo, ma fortemente applicativo, al fine di condividere anche nelle pratiche di lavoro [illegible] misurazioni coerenti, ripetibili e consistenti.

Lo STDC è un gruppo di la[illegible] ambiti che gli [illegible]

www.gufpi-isma.org/stdc

GUFPI-ISMA: STDC

- **Purposes**
  - ✓ Select and analyze main Software & Systems Engineering standards, in particular those ones with a direct interest on measurability issues in software projects and related entities as well as those dealing with related issues.
  - ✓ Find possible applications of such standards (or its parts), potentially useful for working and contractual practices in the Software & Systems Engineering domain.
  - ✓ Collect problems suggested from GUFPI-ISMA members needing to be addressed to National & International standardization bodies on those issues.
  - ✓ Promote agreements with Universities on similar R&D activities on Software & Systems Engineering standards.
- **Deliverables**
  - ✓ Standard cards, presentations, white papers, conference papers

Some informative inputs (1)

GUFPI ISMA

S E V O C A B

Software and Systems Engineering Vocabulary

Home/Search | Print Entire Vocabulary | Help

Welcome to SEVOCAB: Software and Systems Engineering Vocabulary

Find authoritative definitions for software and systems engineering terms in SEVOCAB. A project of the IEEE Computer Society and ISO/IEC JTC 1/SC7, SEVOCAB includes definitions from international standards. You can search for a term as defined in the standards, or for all the definitions in a source standard. To give you an understanding of related concepts, SEVOCAB will return any definition for the term, as well as all the definitions that use the term.

For more information about using the system, please click the "SE Vocab Help" button above.

Search for a Term

Term:

Search for all Terms in a Source

www.computer.org/sevocab

Some informative inputs (2)

GUFPI ISMA

www.jtc1-sc7.org

JTC1 / SC7

Software & System Engineering

Welcome to the official ISO/IEC JTC1/SC7 web site

ENTER

Bienvenue au site officiel du comit ISO/IEC JTC1/S

SEVOCAB: Software and Systems Engineering Vocabu

Mirror Sites

Official JTC1/SC7 Web Site (Canada) GO

This Web site is sponsored by...

Université du Québec
Ecole de technologie supérieure

Ce site est commandité par...

Feedback: secretariat@jtc1-sc7.org

What's New?

Introduction & Mandate
Organisation
Membership & Liaisons

Planning
Ballots and WD

Meetings
Projects
Procedures & Forms

Published Standards
Documents
Publications

Search

Main Menu

SITE OVERVIEW

- This is the official website of ISO/IEC JTC1/SC7, the ISO committee responsible to develop ISO standards in the area of *Software and Systems Engineering*.
- This site provides general information on the organisation of JTC 1/SC7, its activities and members.

JTC1 / SC7

Software & System Engineering

- The What's New section is used to inform readers of the latest updates to this site.
- The Planning section provides direct access to all SC7 planning documentation and reports.
- The Meetings section has information on the meeting schedule of SC7 and its Working Group as well as access to resolutions from past SC7 plenary meetings.
- Published standards are listed in the Standards section, while work in progress is listed in the Project section.
- Ballots in progress are listed in the Ballots section.
- All documents are directly accessible through the Document section.
- The Publication page list selected publications on or referring to JTC 1/SC7 standards

NEW DOCUMENTS

2008-07-27, to 09-07
N4116-4150
2008-09-16
N4151-4155
2008-09-16
N4156-4164

NEW STANDARDS

ISO/IEC TR 14471:2007
ISO/IEC 15939:2007
ISO/IEC 24744:2007
ISO/IEC TR 24774:2007
ISO/IEC 25001:2007
ISO/IEC 25020:2007
ISO/IEC TR 25021:2007
ISO/IEC 25030:2007
ISO/IEC 25051:2006/Cor 1:2007

Some informative inputs (3)

GUFPI ISMA

ISO Standards

Browse by

ICS fields

Technical committees

JTC 1
Information technology

JTC 1/SC 7
Software and system engineering

▶ **ISO/IEC FCD 15504-5**

Items to show

Published standards

▶ **Standards under development**

Both

View shopping basket

Search options

Text

ISO number

Type in search string

Start search

ISO/IEC FCD 15504-5

Information technology -- Process Assessment -- Part 5: An exemplar Process Assessment Model

Edition:	1 (Monolingual)
Number of pages:	
Technical committee / subcommittee:	JTC 1/SC 7; ISO Standards
ICS:	35.080
Status:	Under development
Current stage:	40.20
Stage date:	2004-12-31
Publication target date:	
Revision information: (Show)	

Abstract

No abstract a

STAGE	SUBSTAGE						
				90 Decision Substages			
	00 Registration	20 Start of main action	60 Completion of main action	92 Repeat an earlier phase	93 Repeat current phase	98 Abandon	99 Proceed
00 Preliminary stage	00.00 Proposal for new project received	00.20 Proposal for new project under review	00.60 Close of review			00.98 Proposal for new project abandoned	00.99 Approval to ballot proposal for new project
10 Proposal stage	10.00 Proposal for new project registered	10.20 New project ballot initiated	10.60 Close of voting	10.92 Proposal returned to submitter for		10.98 New project	10.99 New project

www.iso.org/iso/stage_codes.pdf

STDC Deliverables

- **D1 - Standard Cards**
  - ✓ D1.1 – ISO/IEC 12207:2008
  - ✓ D1.2 – ISO/IEC 9126-1:2001
  - ✓ D1.3 – ISO/IEC 14764:2006
  - ✓ D1.4 – ISO/IEC 14143-5:2004
  - ✓ …
- **D2 - Presentations**
  - ✓ MAIN (Madrid, Feb 21-23, 2011)
- **D3 - Report/White Paper**
  - ✓ TBD
- **D4 - Conference Paper**
  - ✓ TBD

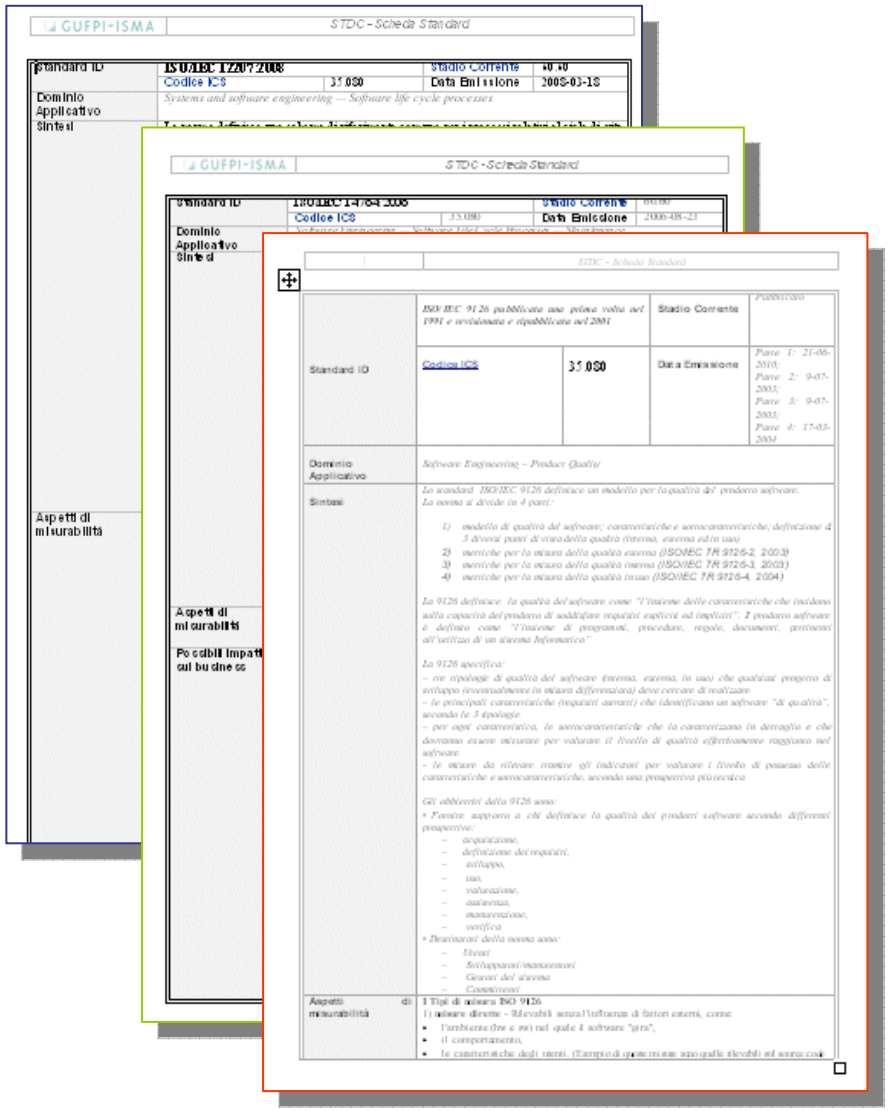

www.gufpi.org/areasoci/

STDC Deliverables: D1

- D1 - Standard Sw Measurement-related
  - ✓ Ongoing document
  - ✓ Collect the standard cards
  - ✓ English translation by March 2011
  - ✓ Two main sections added:
    - o Measurability issues
    - o Possible Impacts on Business

Standard per la Misurazione del Software | v. 1.0

Standard per la Misurazione del Software
v 1.0

STDC GUFPI-ISMA

GUFPI-ISMA

Gruppo Utenti Function Point Italia – Italian Software Metrics Association

2011 © GUFPI-ISMA – Standards Committee (STDC) | Pag. 1

STDC Deliverables: D1

GUFPI ISMA

Standard ID

Abstract

Title & Application Domain

Measurability Issues

Possible Impacts on Business

Standard ID	ISO/IEC IS 9126-1:2001		Stadio Corrente	90.92
	Codice ICS	35.080	Data Emissione	2010-10-12
Titolo e Dominio Applicativo	*Software engineering -- Product quality -- Part 1: Quality model*			
Sintesi	Lo standard ISO/IEC 9126-1 definisce un modello per la qualità del prodotto software, offrendo una vista multi-prospettiva, trattate in diversi documenti Tale standard è ripartito in quattro parti: • 9126-1: modello di qualità del software con la definizione di tre diversi punti di vista della qualità (interna, esterna ed in uso); il modello è composto da 6 caratteristiche (funzionalità; affidabilità; efficienza; usabilità; manutenibilità; portabilità), ciascuna ripartita in sotto-caratteristiche, per un totale di 27; • 9126-2: metriche per la misura della *qualità esterna* (ISO/IEC TR 9126-2:2003); • 9126-3: metriche per la misura della *qualità interna* (ISO/IEC TR 9126-3:2003); • 9126-4: metriche per la misura della *qualità in uso* (ISO/IEC TR 9126-4:2004), che definisce ulteriori 4 caratteristiche (efficacia; produttività; soddisfazione; sicurezza).			
Aspetti di Misurabilità	• Tutto lo standard è relativo ad aspetti misurabili. In particolare: o Definizioni delle caratteristiche e sotto-caratteristiche: permettono di oggettivare e condividere i concetti da riportare a misure oggettive; o Classificazione delle misure secondo il numero e relazione tra gli operandi in dirette, indirette ed indicatori; o Classificazione delle misure secondo il contenuto in misure di dimensione (o volume), tempo, occorrenza.			
Possibili Impatti sul Business	• La parte 1 propone un modello di qualità per prodotti software, riferibili a requisiti non funzionali (NFR – Non functional requirements). Tali caratteristiche e sotto-caratteristiche, abbinate alle 200+ misure suggerite nelle parti 2-3-4, possono rappresentare una base di partenza nella stesura di un contratto per la valutazione tecnica e relativa quotazione economica di parte degli aspetti non-funzionali, pertanto *'out-of-scope'* per misure funzionali quali i Function Point (IFPUG; COSMIC, ecc.).			

Possible Values

www.digistan.org

Possible Values

GUFPI ISMA

- Have a 'transparent' and 'neutral' mechanism in contract management to be used by both counterparts...
  - ✓ ...if a RFP requests a certain quality profile for the system to be released, compliant with the ISO/IEC 9126-1:2001 quality model...
  - ✓ ...if few measures on 'external quality' can be selected and used from ISO/IEC 9126-2 (some yet 'ready to use')...
  - ✓ ...if a FSM method as IFPUG FPA or COSMIC is needed to determine the software functional size...
- Have a validated library of information to be accessed and used for designing solutions for customers or for better preparing bids for providers
  - ✓ Why reinventing the wheel if possible technical solutions to a certain issue yet exist and need only to be applied?
  - ✓ ... simply needed to know and be aware about standards!
- Use a specific, common and shared glossary
  - ✓ ISO/IEC FCD 24765; IEEE-STD 610.12:1990 (R2002)
  - ✓ SEVOCAB (http://pascal.computer.org/sev_display/index.action)
- Use (possible) reference taxonomies
- ...

Using 'draft' standards

GUFPI ISMA

- **Challenges**
  - ✓ Evaluate technologies/methodologies
  - ✓ Availability of evaluating criteria for Small-Medium Enterprises (SME)
  - ✓ Availability of teaching materials/guides
  - ✓ Availability of (de facto) standards

- **Teaching viewpoint**
  - ✓ Reduce the gap between theory and industrial practices, using real 'draft' documents

- **Learning viewpoint**
  - ✓ Demistify the idea of 'perfection' a standard is supposed to have, showing the '*work in progress*' before the final version
  - ✓ Understand the *peer review* process to perform in simulation sessions during a course, to be re-applied in 'real' projects
  - ✓ Such comprehension and awareness make stronger and stronger the value of the work from those study groups

Contacts & Meetings

Contacts

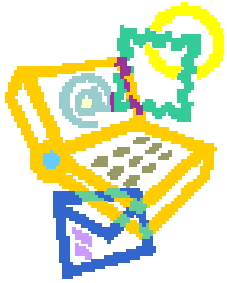

- Luigi Buglione: luigi.buglione@gufpi.org
- Nicola Iacovelli: nicola.iacovelli@gufpi.org

Meetings frequency

- 4-5 meetings per year, typically done by video-call conferences

WG Participants

- Luigi Buglione **Engineering.IT**
- Luigi Francavilla **Gruppo ISEI**
- Nicola Iacovelli **Svimservice - Exprivia Group**
- Andrea Salvatori **NECS**
- Luca Santillo **Agile Metrics**
- …

Question Time (!)

Thanks for your attention!

¡Gracias por Vuestra atención!